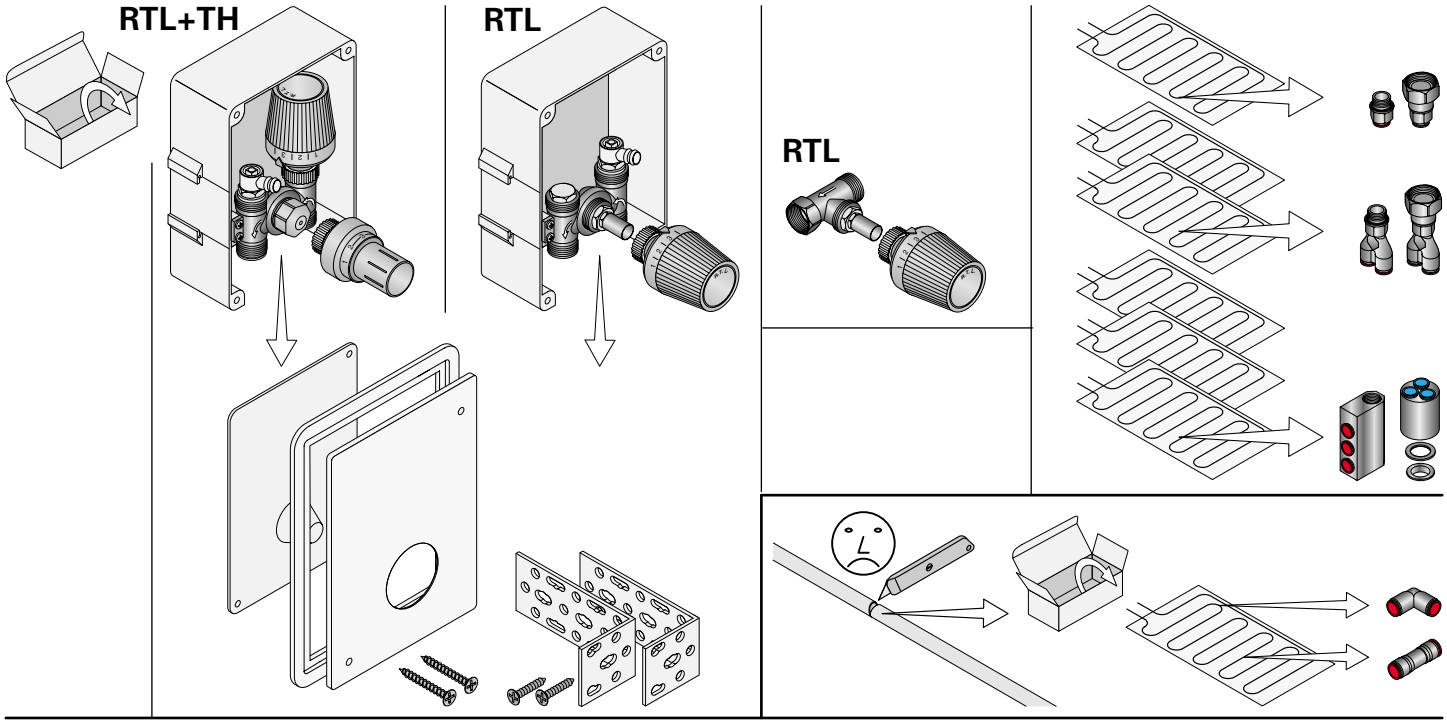
RTL+TH
RTL
RTL

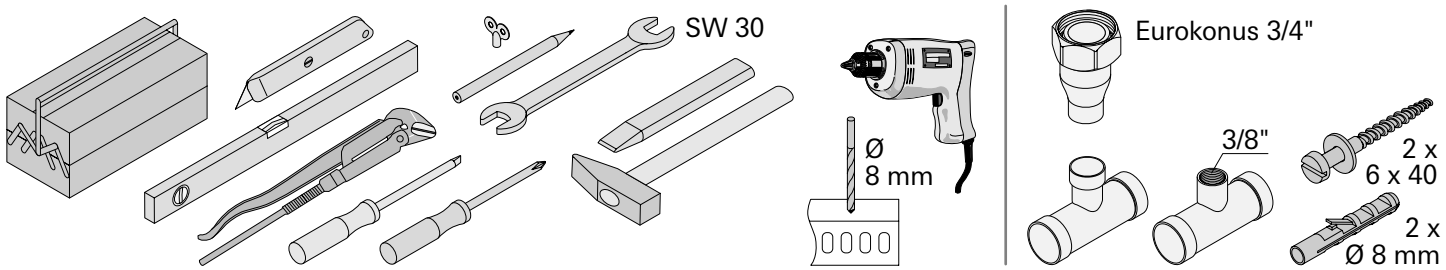
SW 30
Ø
8 mm
Eurokonus 3/4"
3/8"
2 x
6 x 40
2 x
Ø 8 mm

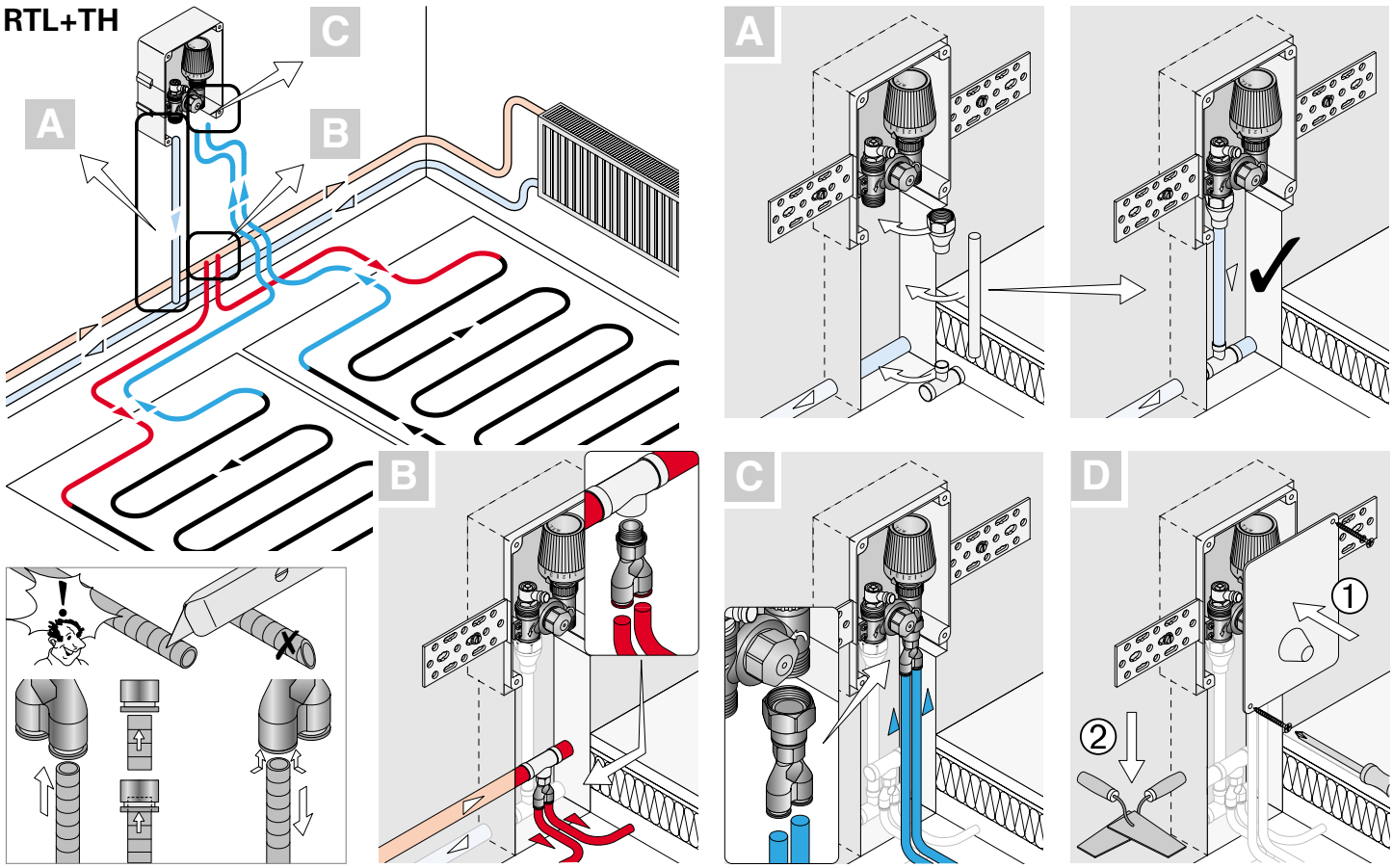
RTL+TH
A
B
C
A
B
C
D
1
2

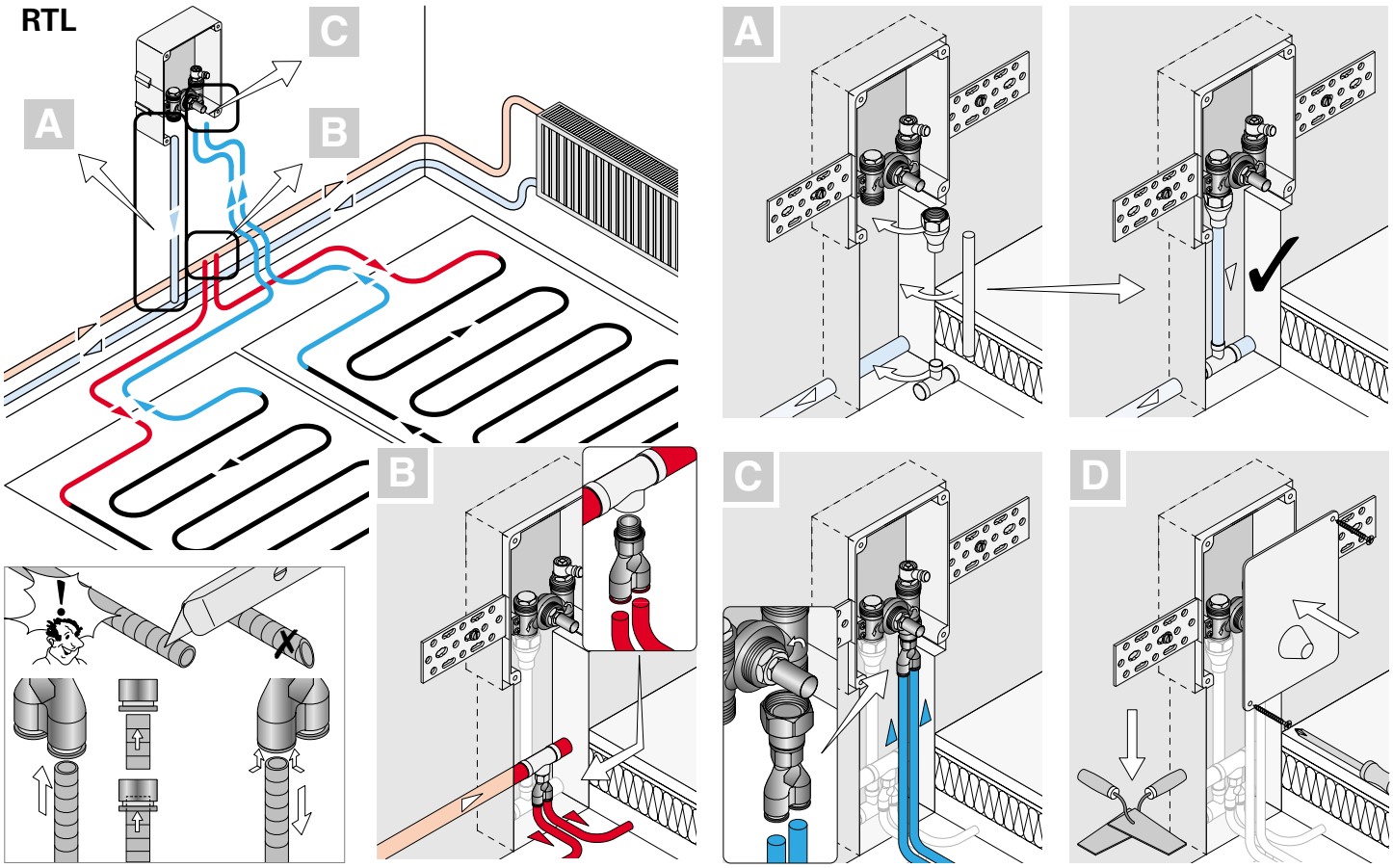
RTL
A
B
C
A
B
C
D

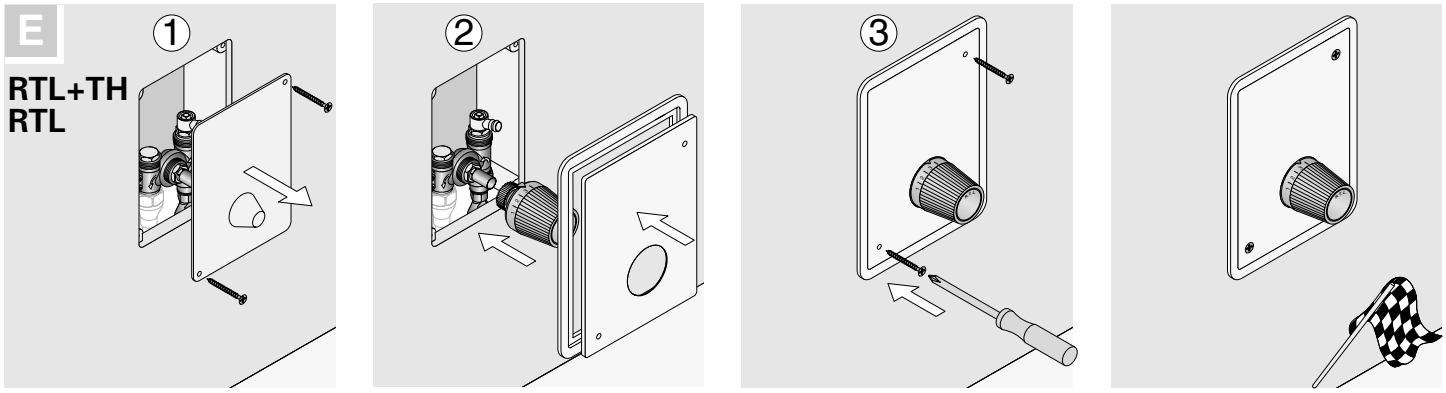
E
RTL+TH
RTL
1
2
3

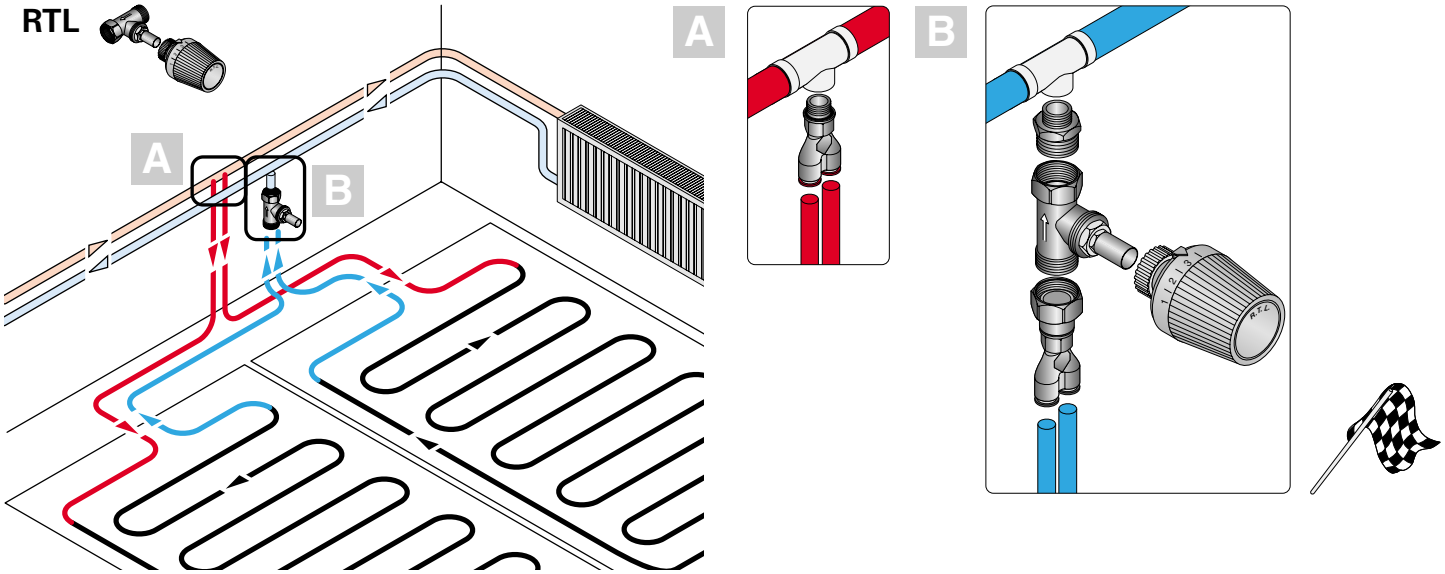
RTL
A
B
A
B