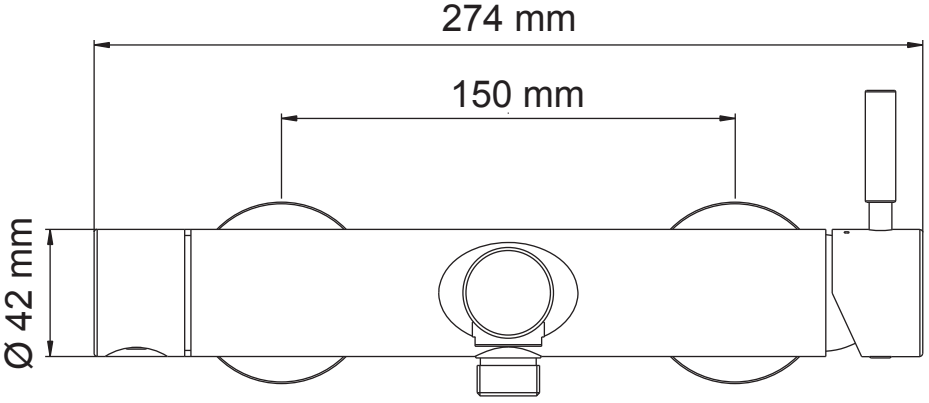
274 mm
150 mm
Ø 42 mm

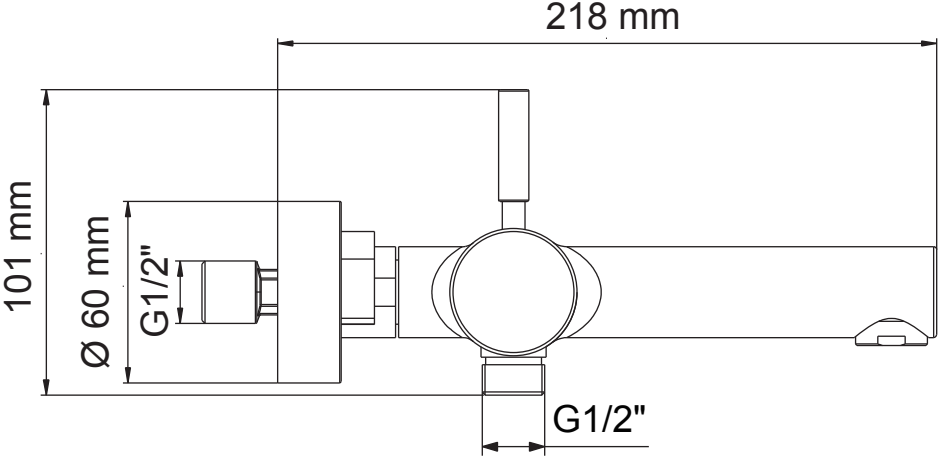
218 mm
101 mm
Ø 60 mm
G1/2"
G1/2"