KEO

KOROMO
by KEO

V1 20191101

Manufactured for
HORNBACH Baumarkt AG
Hornbachstrasse 11
76879 Bornheim/Germany
www.hornbach.com

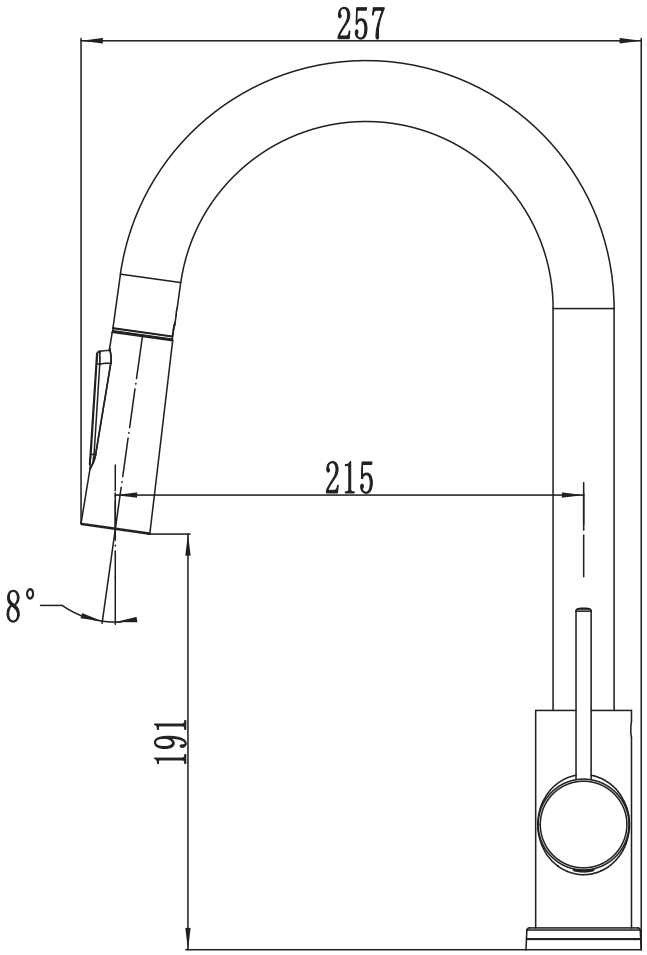
257
215
8°
191

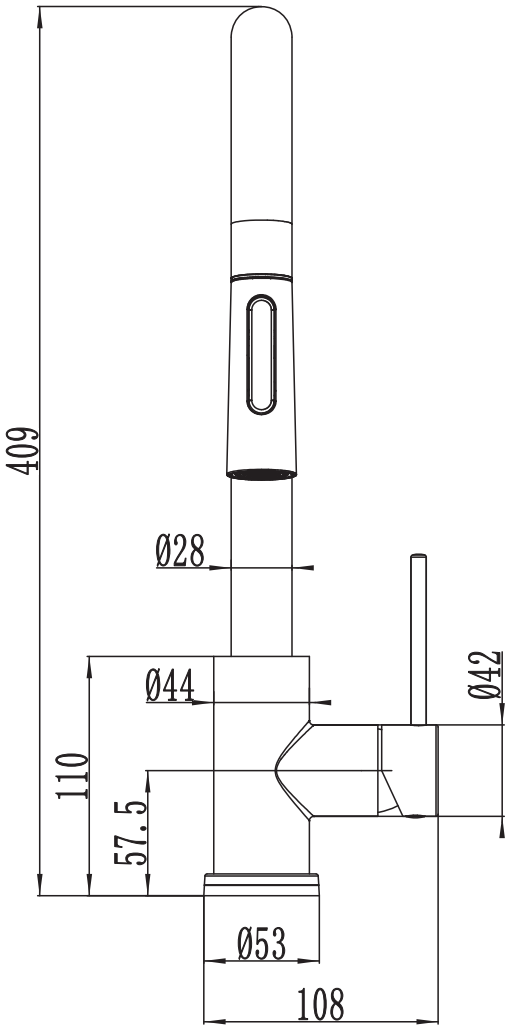
409
Ø28
Ø44
Ø42
110
57.5
Ø53
108

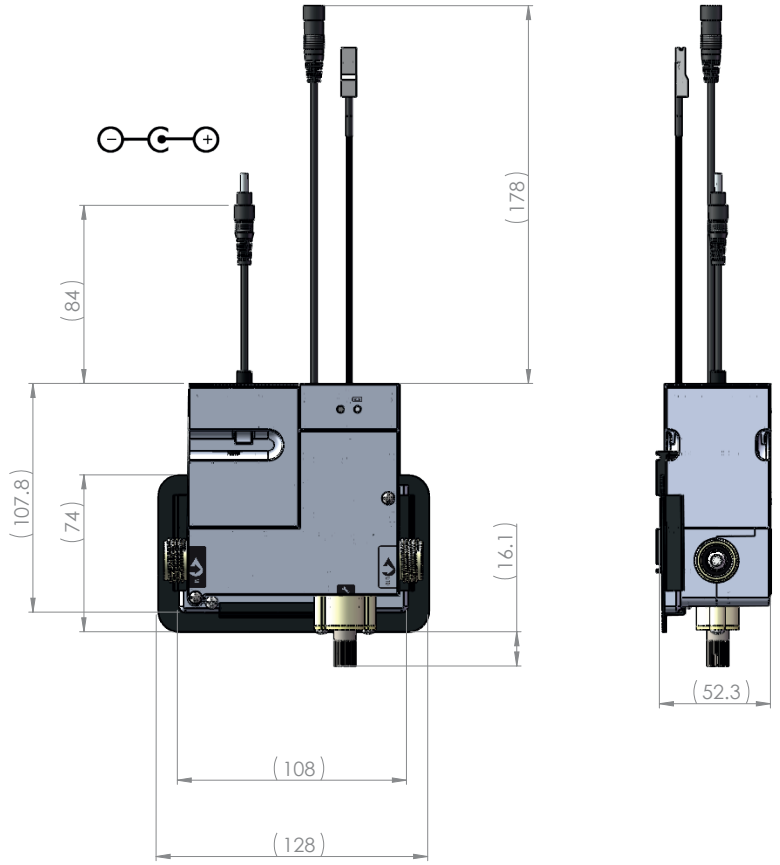
(178)
(84)
(107.8)
(74)
(16.1)
(52.3)
(108)
(128)

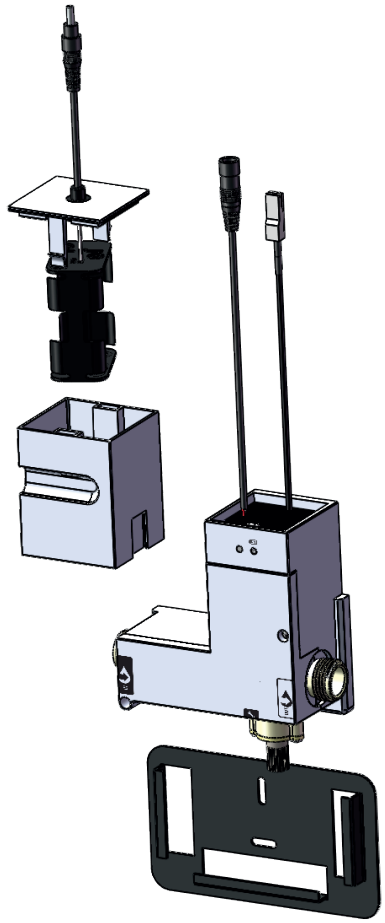

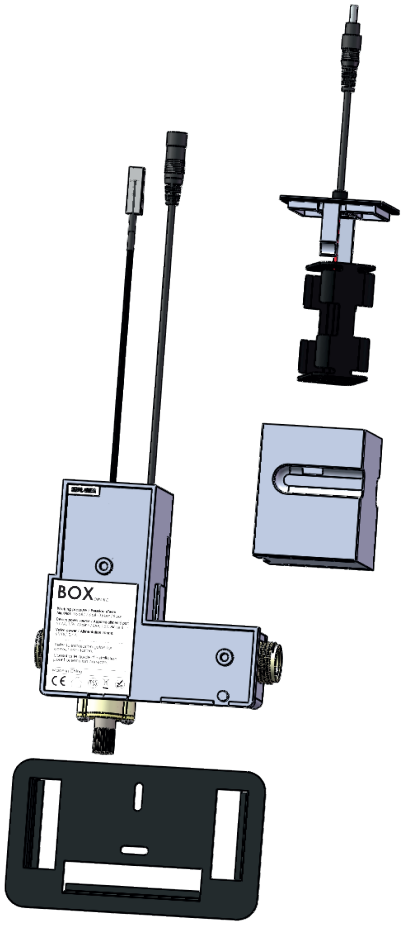
BOX