www.weka-holzbau.com

Seitlicher Dachanbau

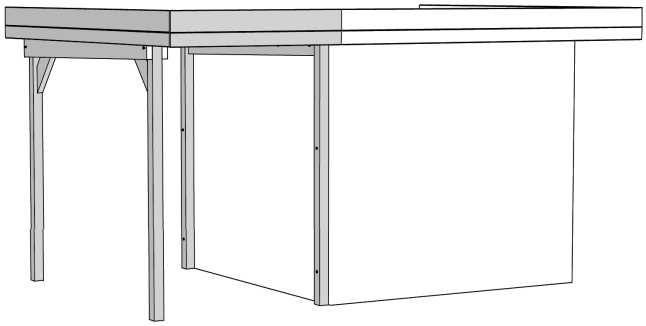

100.2824.40020
100.2824.41020

100.2830.40020
100.2830.41020

Montage-, Bedienungs- und Wartungsanleitung

800.0286.17.56 800-0286-20-40

Stand: 2101

Pos	Bild	Abmessung (mm)	Anzahl (Stück)	
			100.2824.4..	100.2830.4..
1	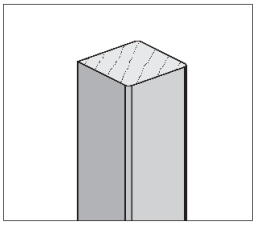	80/80/2200	4	4
2	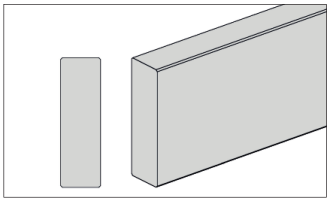	45/146/2350 45/146/2950	1 -	- 1
3	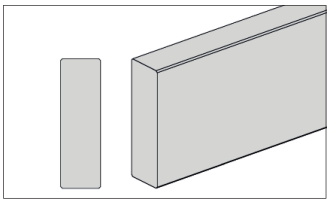	45/146/2350 45/146/2950	2 -	- 2
4	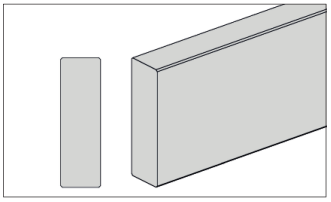	45/146/3200	5	5
5	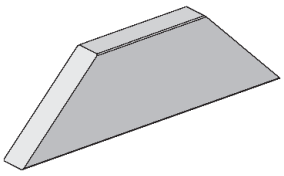	45/146/500	2	2
6	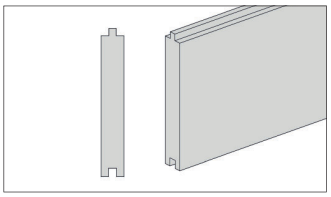	18,5/121/3080 18,5/121/3710	29 -	- 29
7	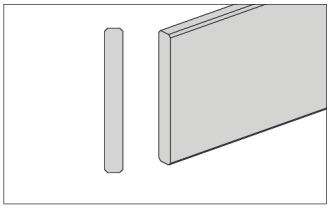	18,5/146/3400	1	1

© Copyright HRB 3662

Pos	Bild	Abmessung (mm)	Anzahl (Stück)	
			100.2824.4..	100.2830.4..
8	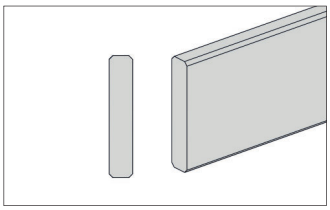	18,5/96/3300	1	1
9	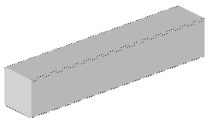	28/28/150	4	4
10	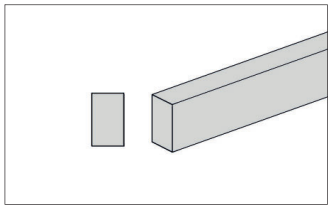	15/25/2000	2	2
11	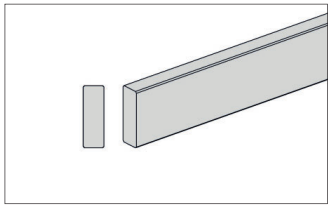	15/45/2300	3	3

 © Copyright HRB 3662

Pos	Bild	Abmessung (mm)	Anzahl (Stück)
M1	K001.8050.0004 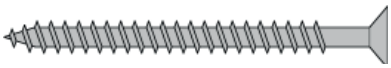	5,0 x 80	4
M2	K001.3035.0004	3,5 x 30	30
M3	K002.2050.0004 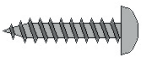	5,0 x 20	100
M4	K031.5050.0001	50/50/40	12
M5	K008.9008.0001	M8 x 90	5
M6	K008.1208.0001	M8 x 120	6
M7	K008.1408.0001 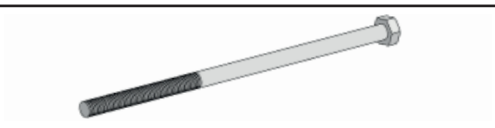	M8 x 140	4
M8	K008.1808.0001 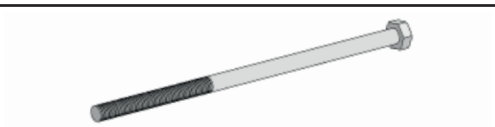	M8 x 180	4
M9	K020.8400.0001	8,4	38
M10	K024.0800.0001	M8	19
M11	K010.5022.0001	2,2 x 55	350
-	-	-	-
M13	K001.4040.0004 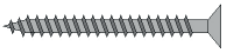	4,0 x 40	50
M14	K001.1250.0004	5,0 x 120	4

 © Copyright HRB 3662

1

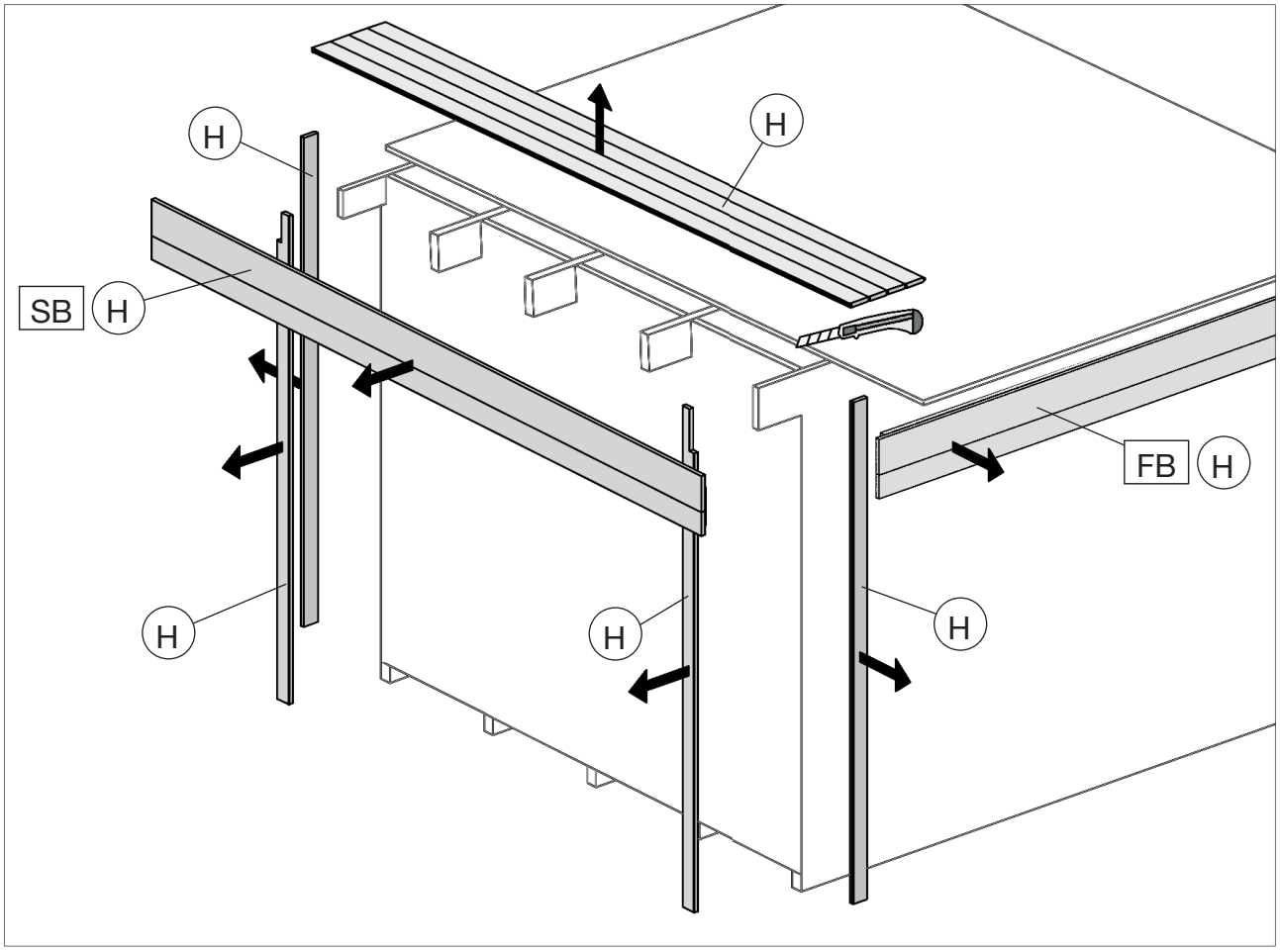

2

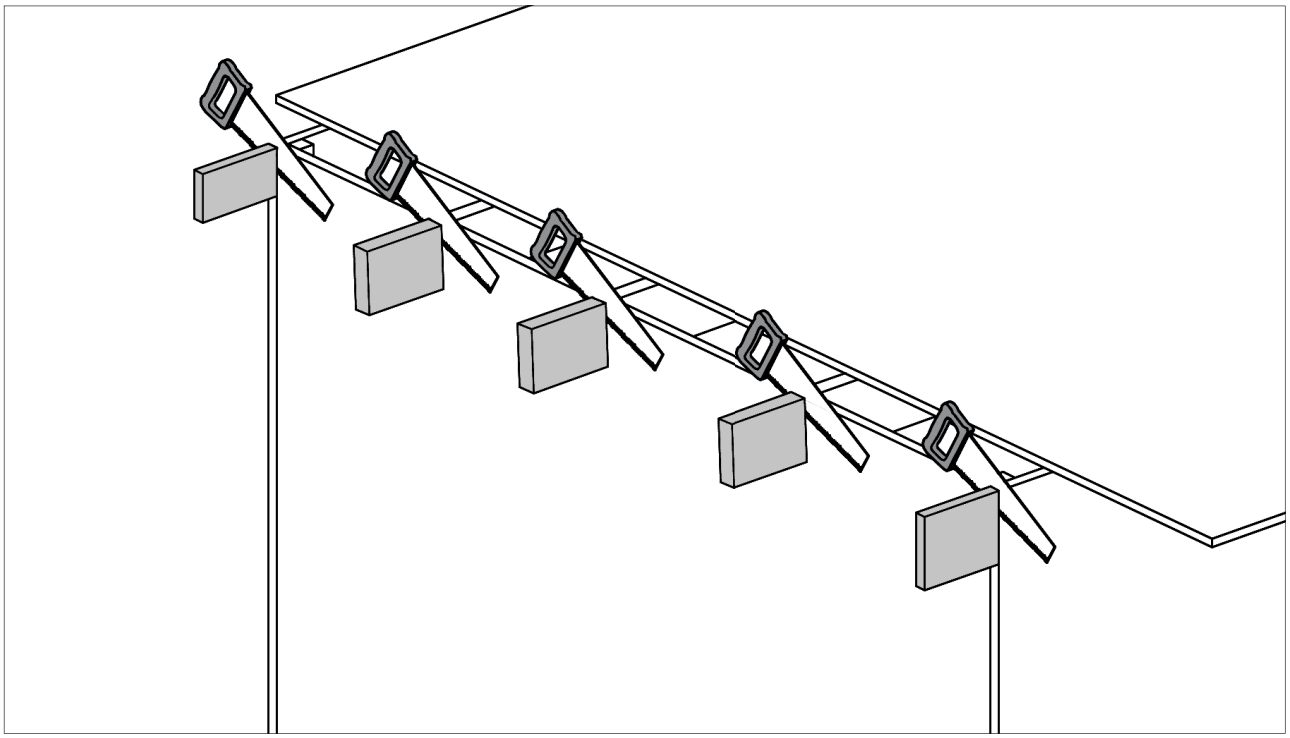

 © Copyright HRB 3662

3

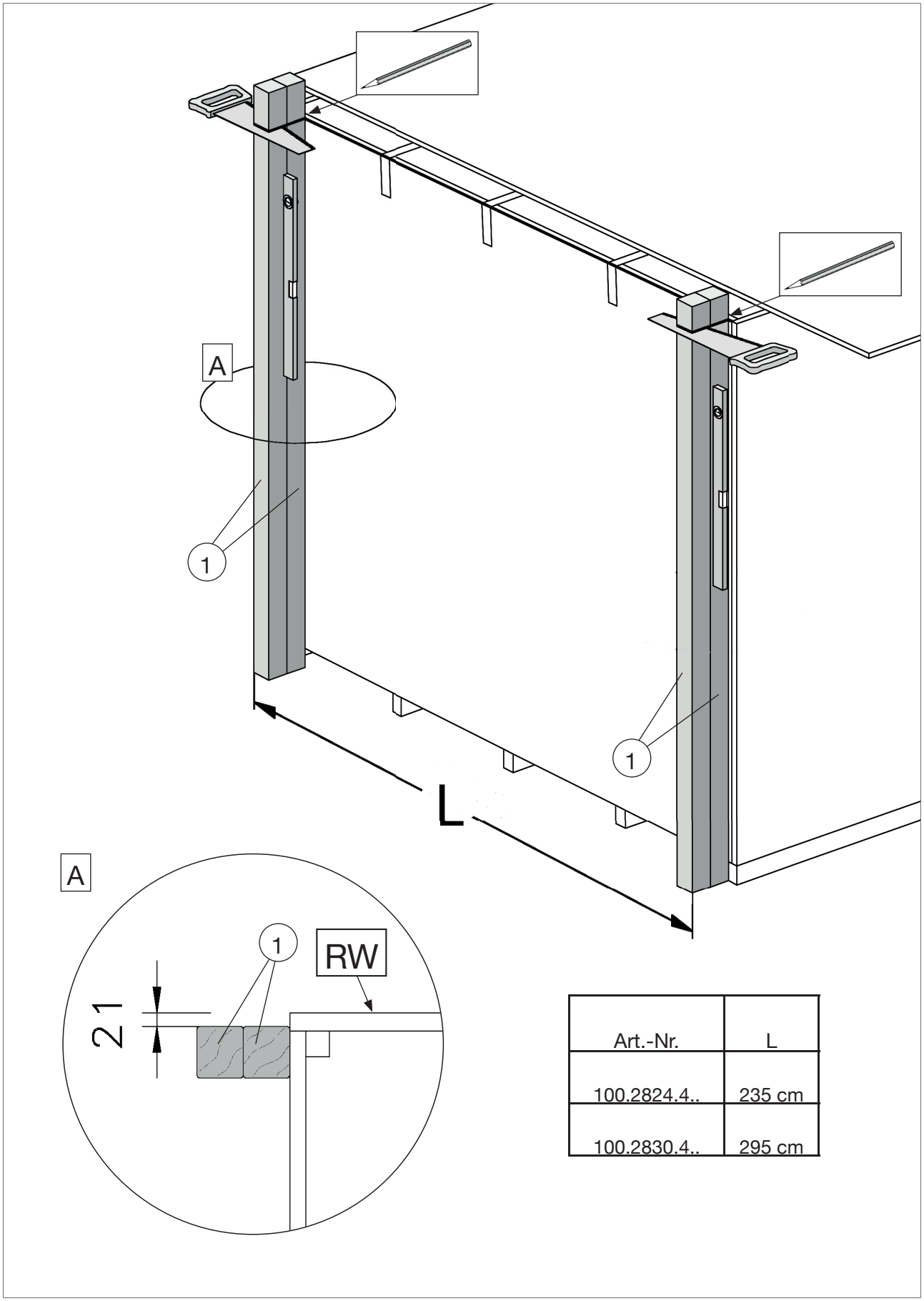

Art.-Nr.	L
100.2824.4..	235 cm
100.2830.4..	295 cm

 © Copyright HRB 3662

4

M6	M8 x 120	M9	8,4
		M10	M8

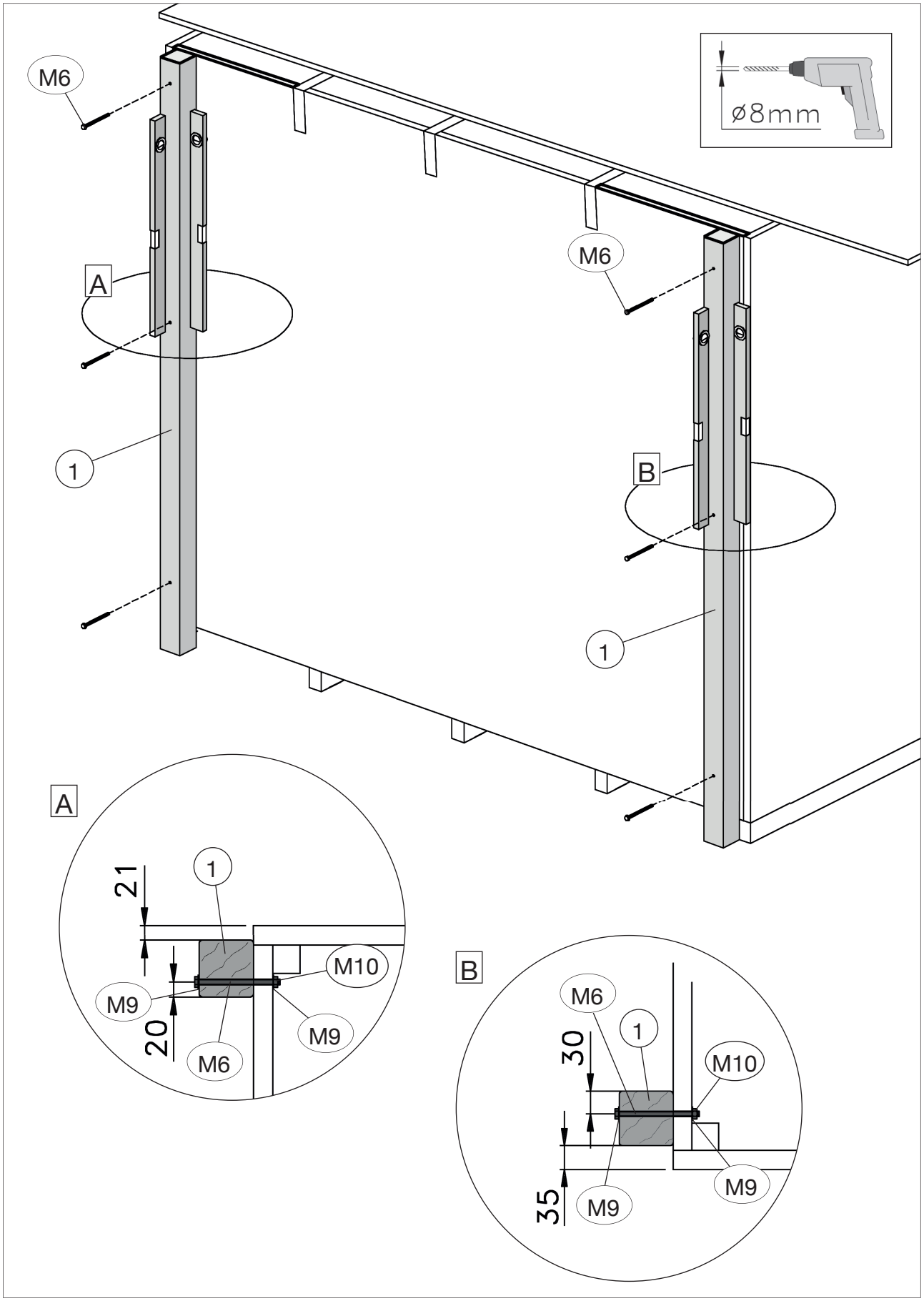

 © Copyright HRB 3662

5

M5	M8 x 90	M9	8,4
		M10	M8

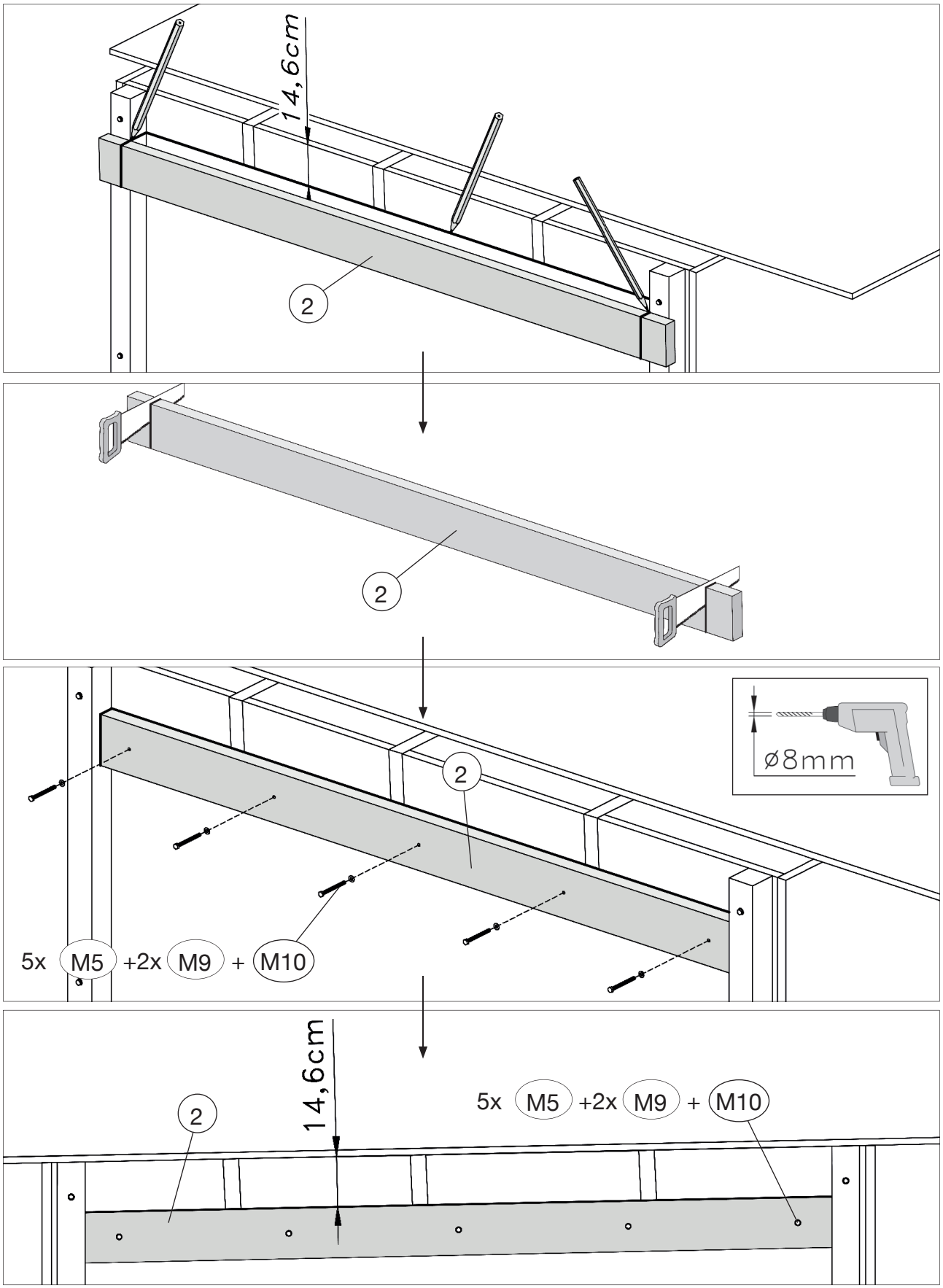

 © Copyright HRB 3662

6

M7	M8 x 140	M9	8,4
		M10	M8

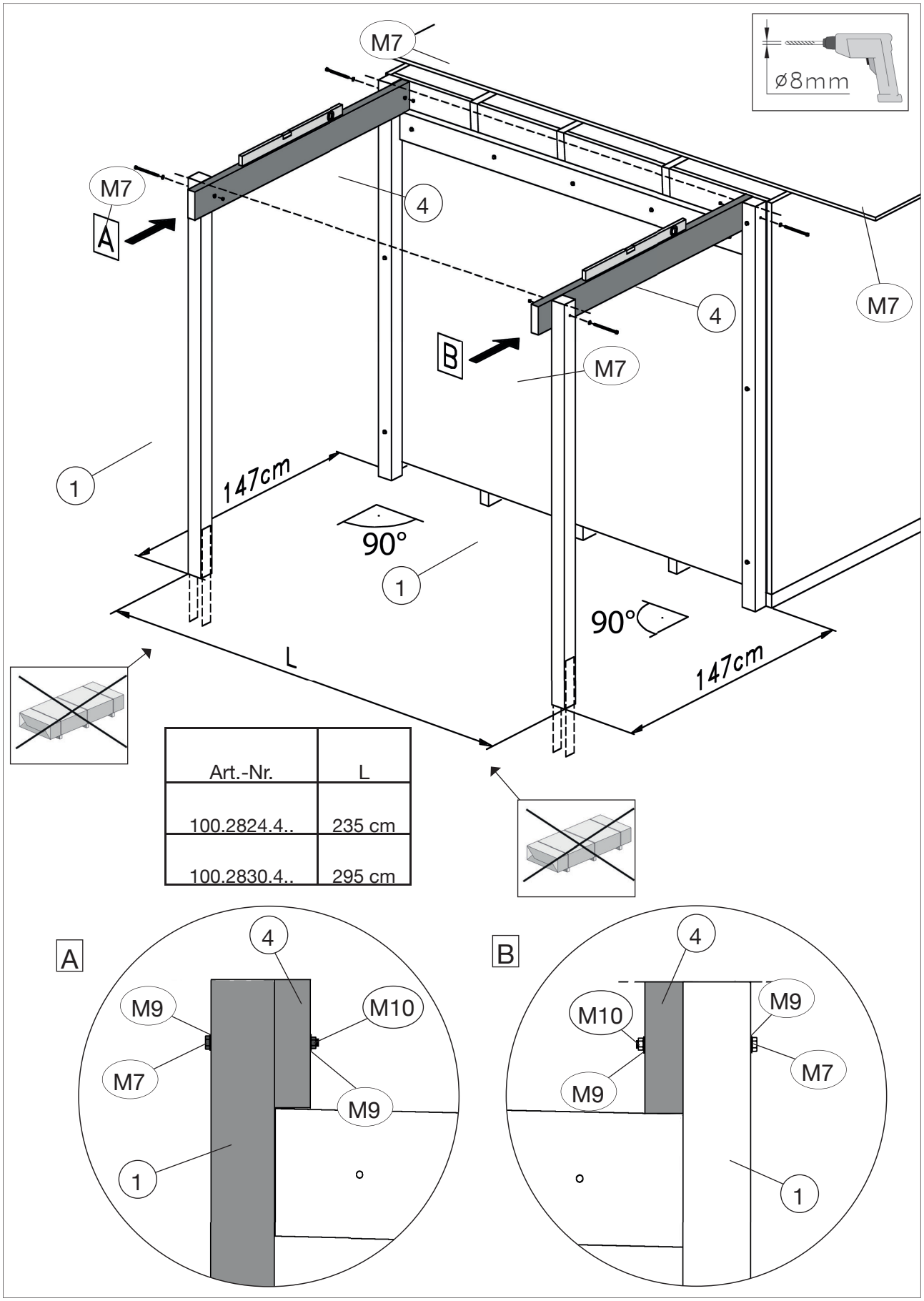

Art.-Nr.	L
100.2824.4..	235 cm
100.2830.4..	295 cm

© Copyright HRB 3662

7

M1	5,0 x 80	M8	M8 x 180	M9	8,4
M14	5,0 x 120			M10	M8

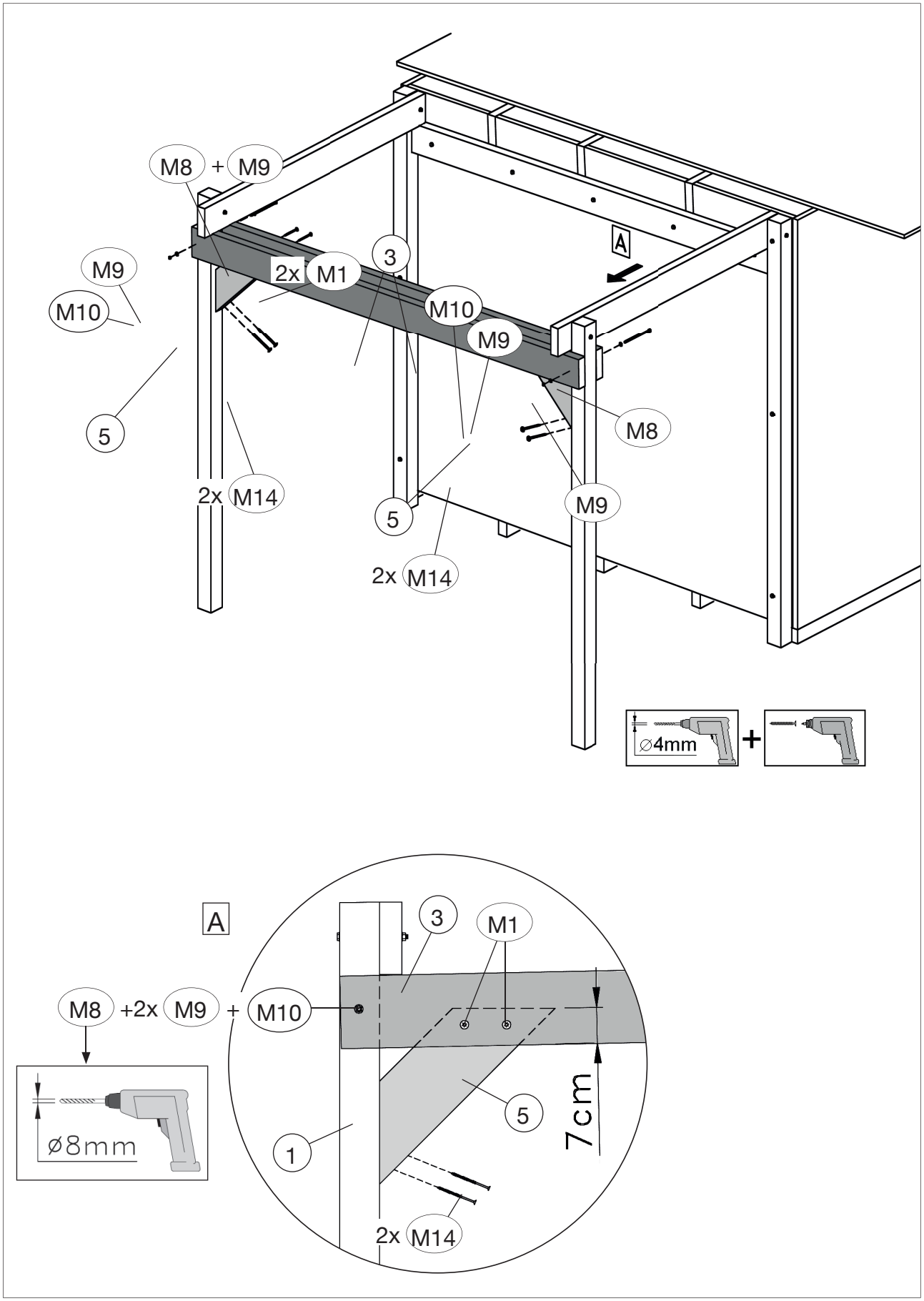

 © Copyright HRB 3662

8

	M3	5,0 x 20
	M4	50/50/40

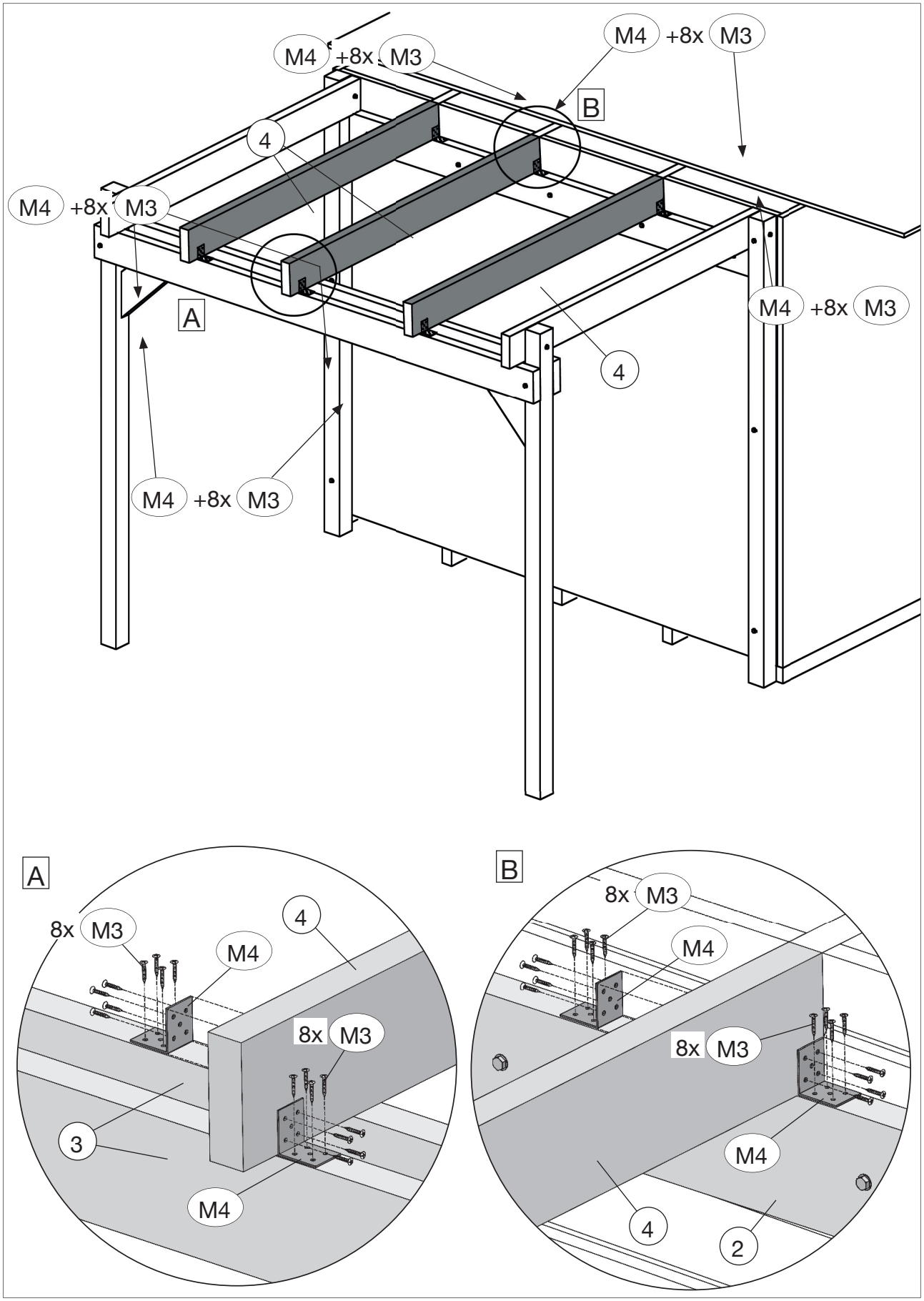

 © Copyright HRB 3662

9

	M11	2,2 x 55

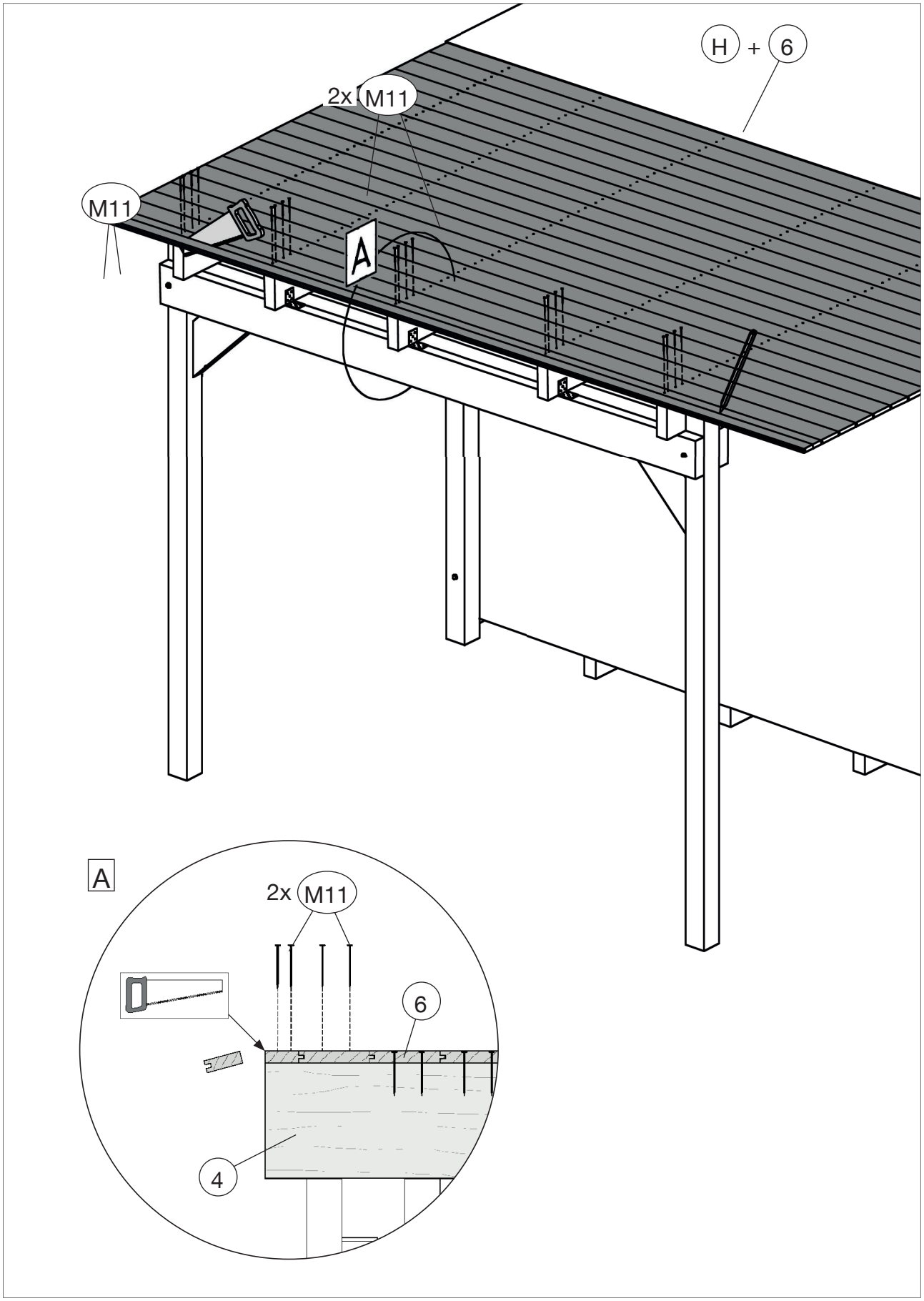

 © Copyright HRB 3662

10

	M12	2,0 x 16
	M2	3,5 x 30

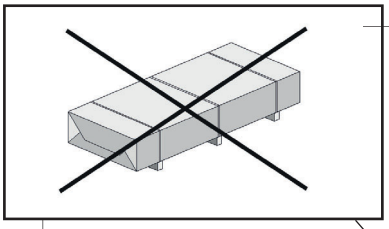

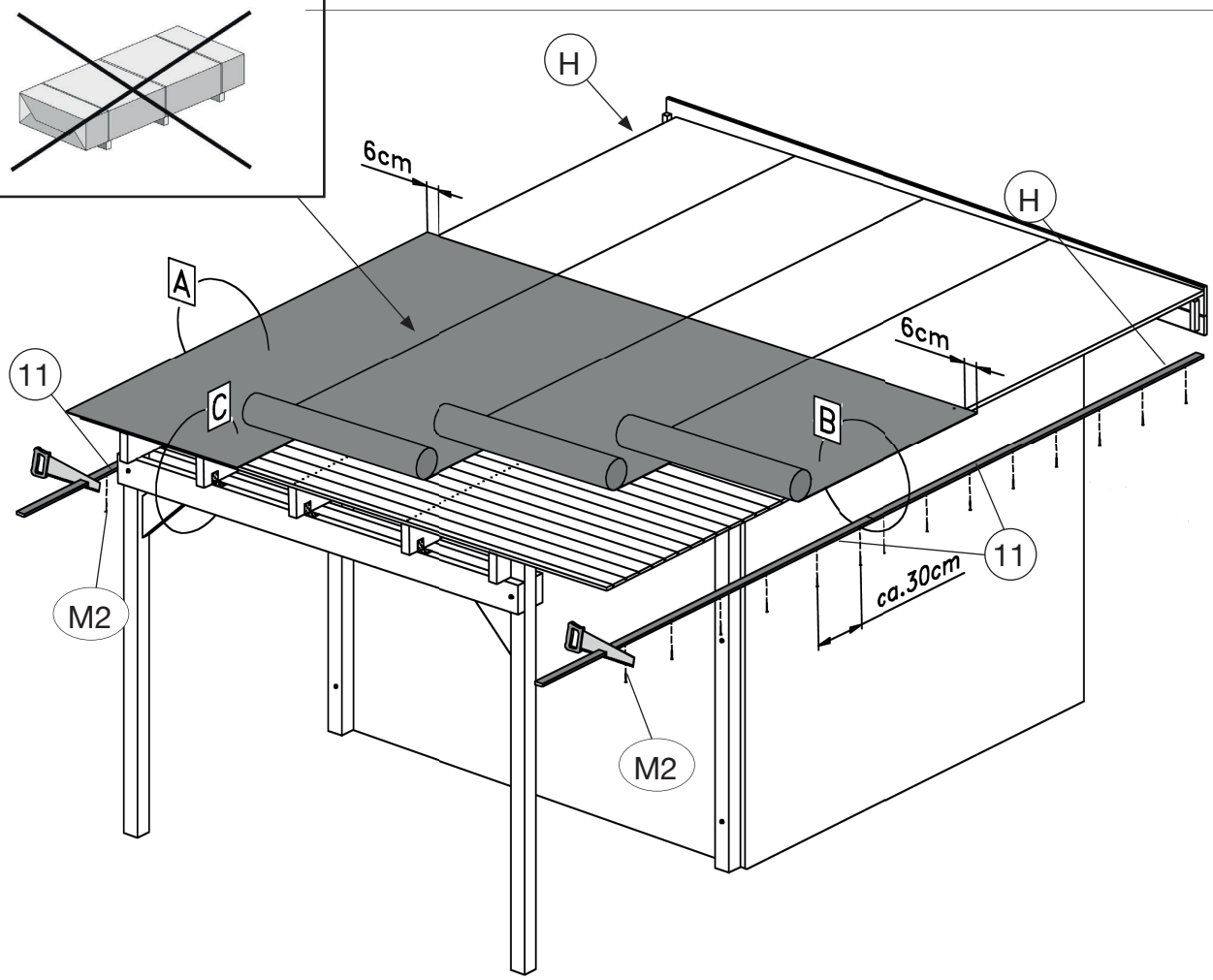

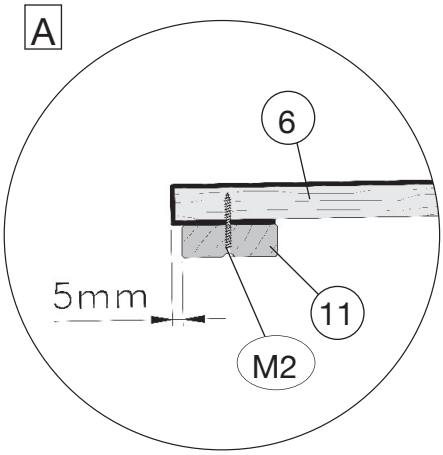

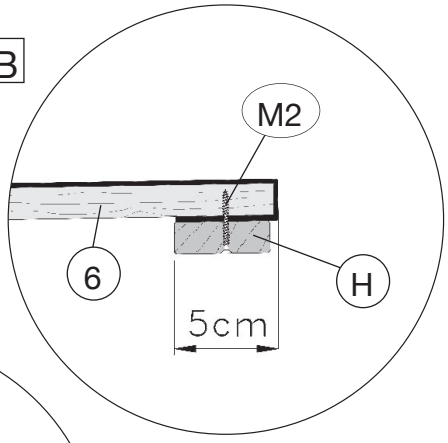

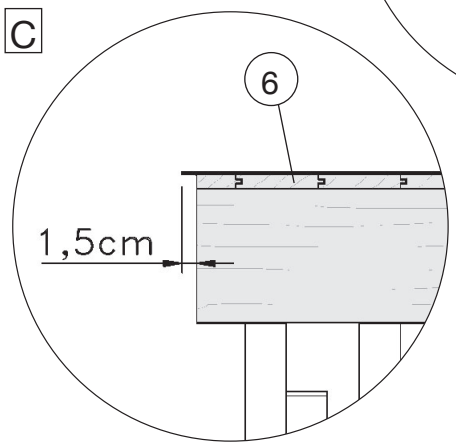

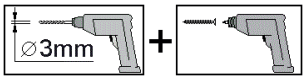

 © Copyright HRB 3662

11

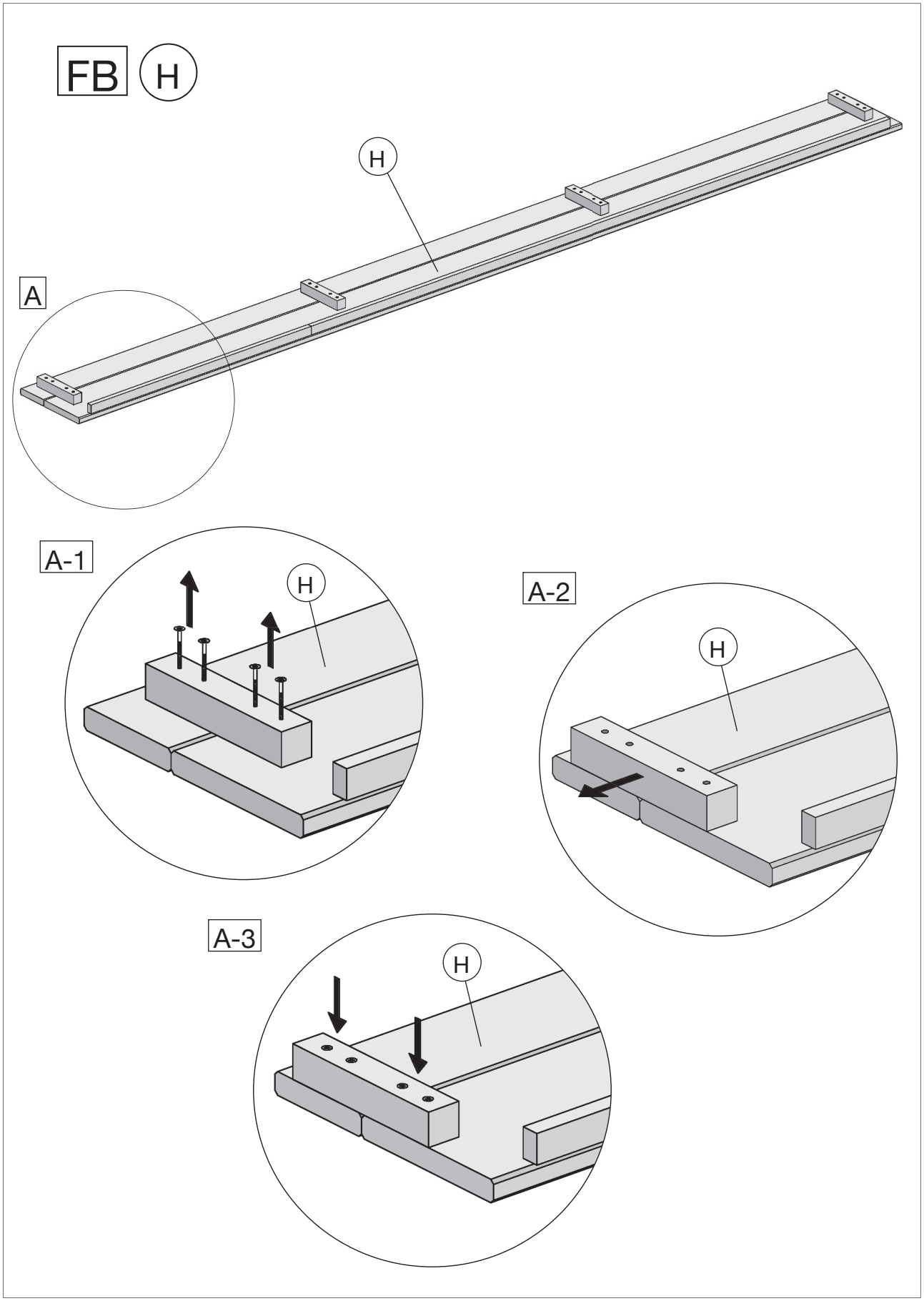

 © Copyright HRB 3662

12

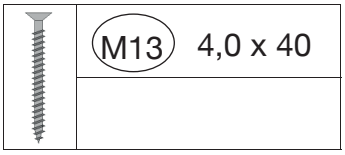

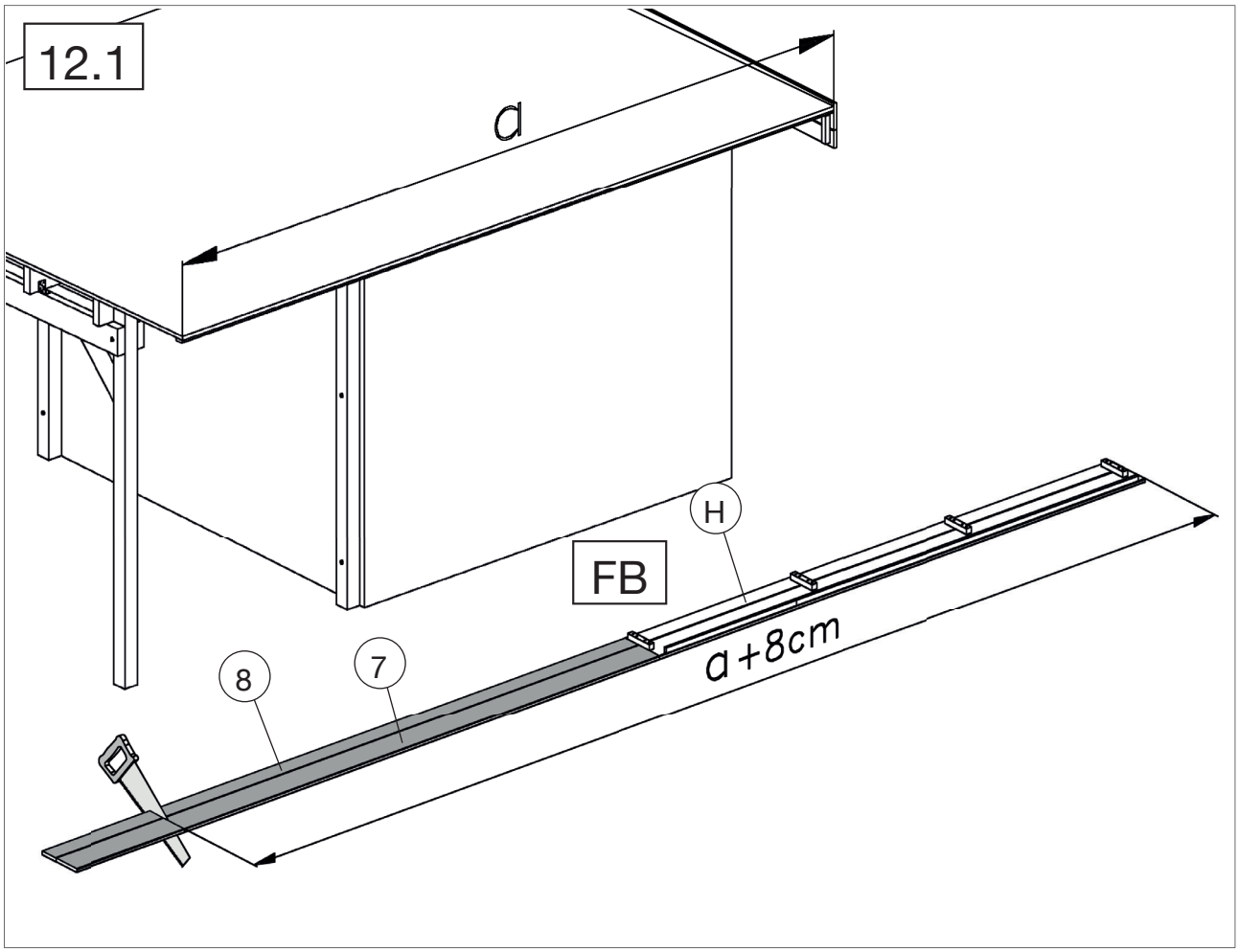

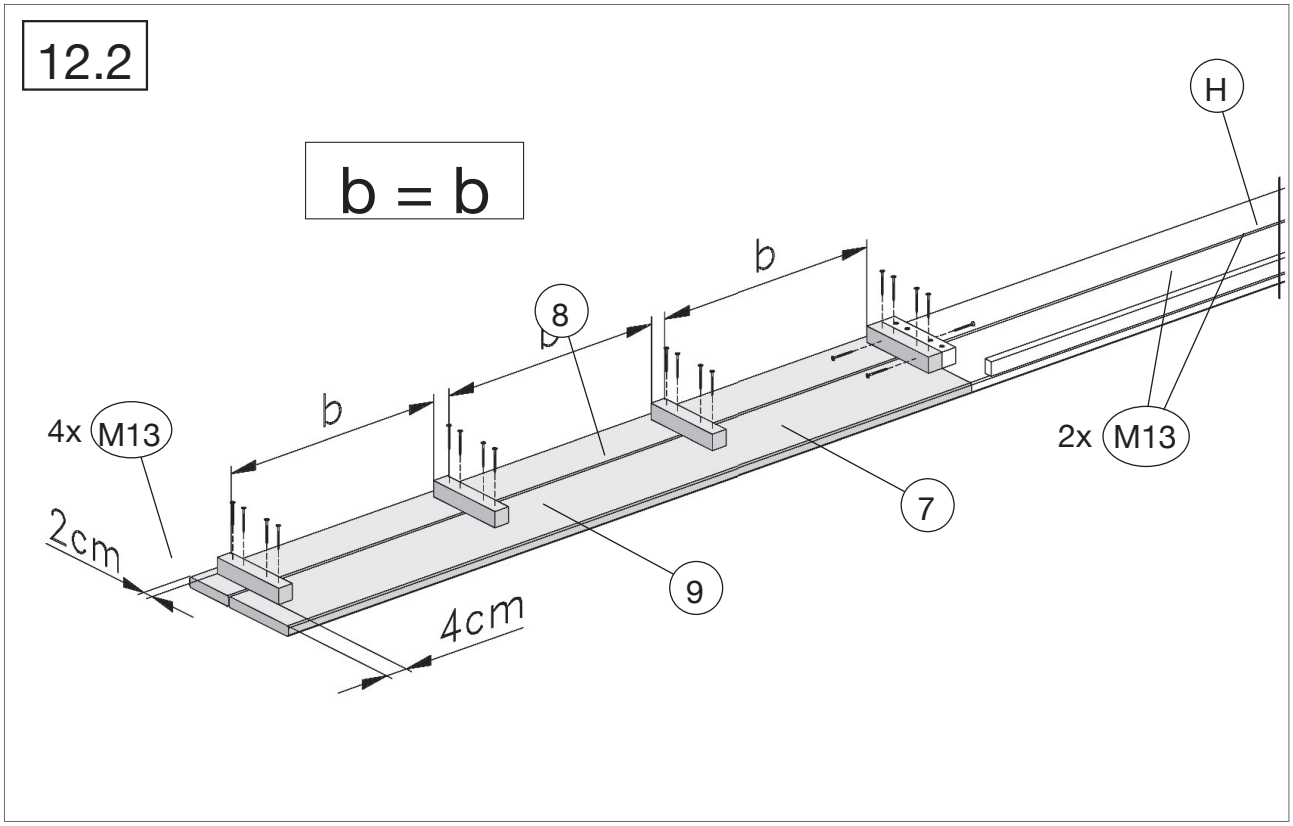

 © Copyright HRB 3662

12

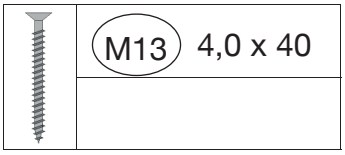

12.3

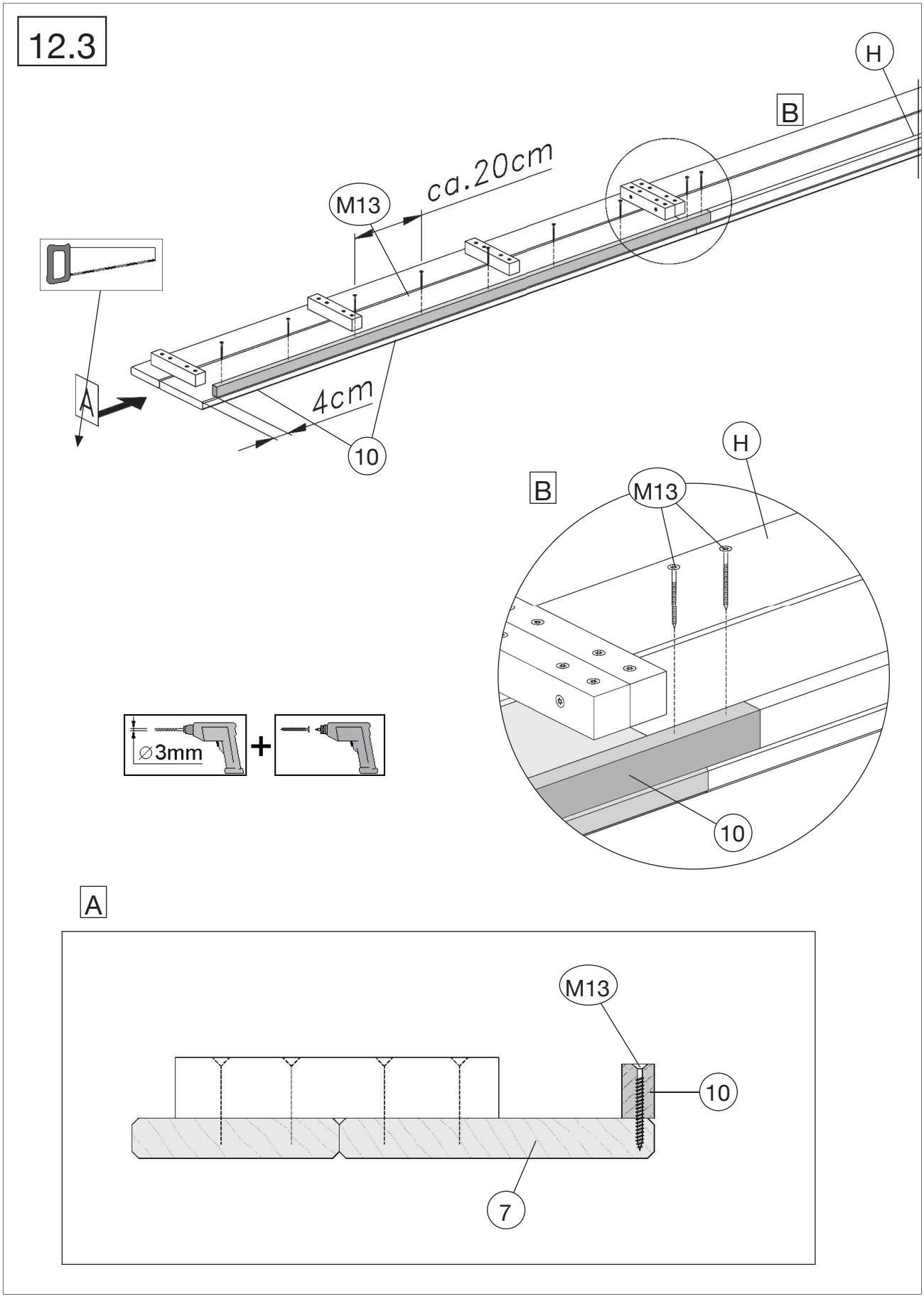

 © Copyright HRB 3662

12

M13	4,0 x 40

12.4

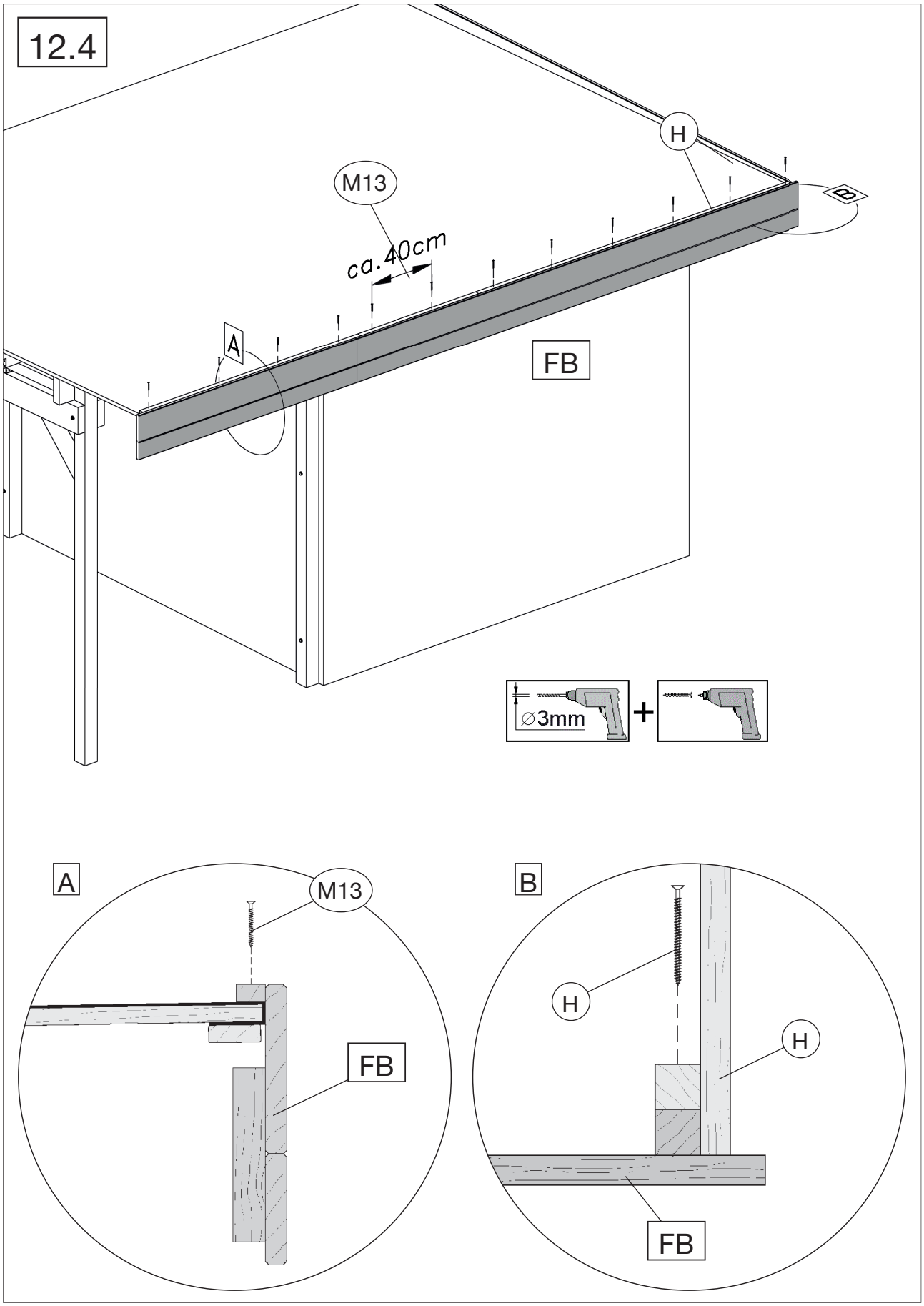

 © Copyright HRB 3662

13

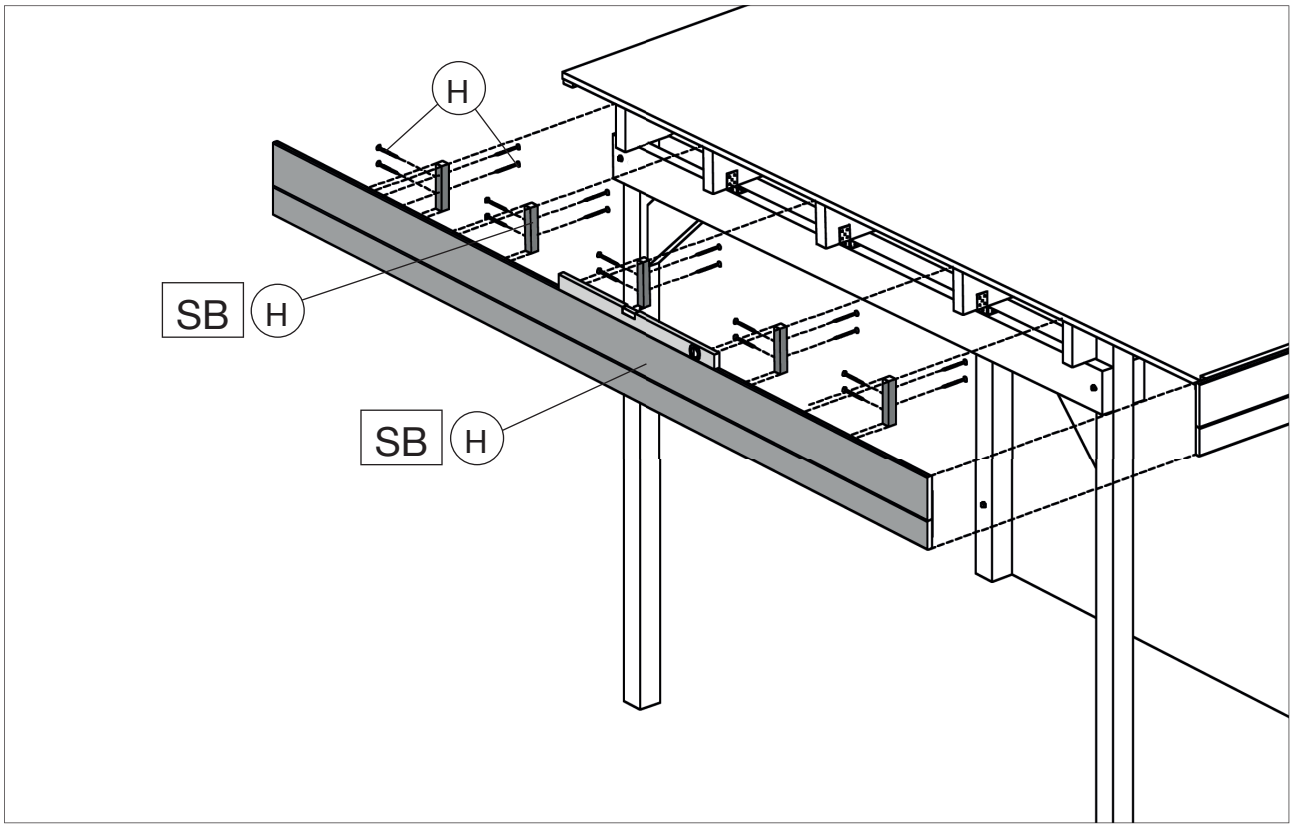

14

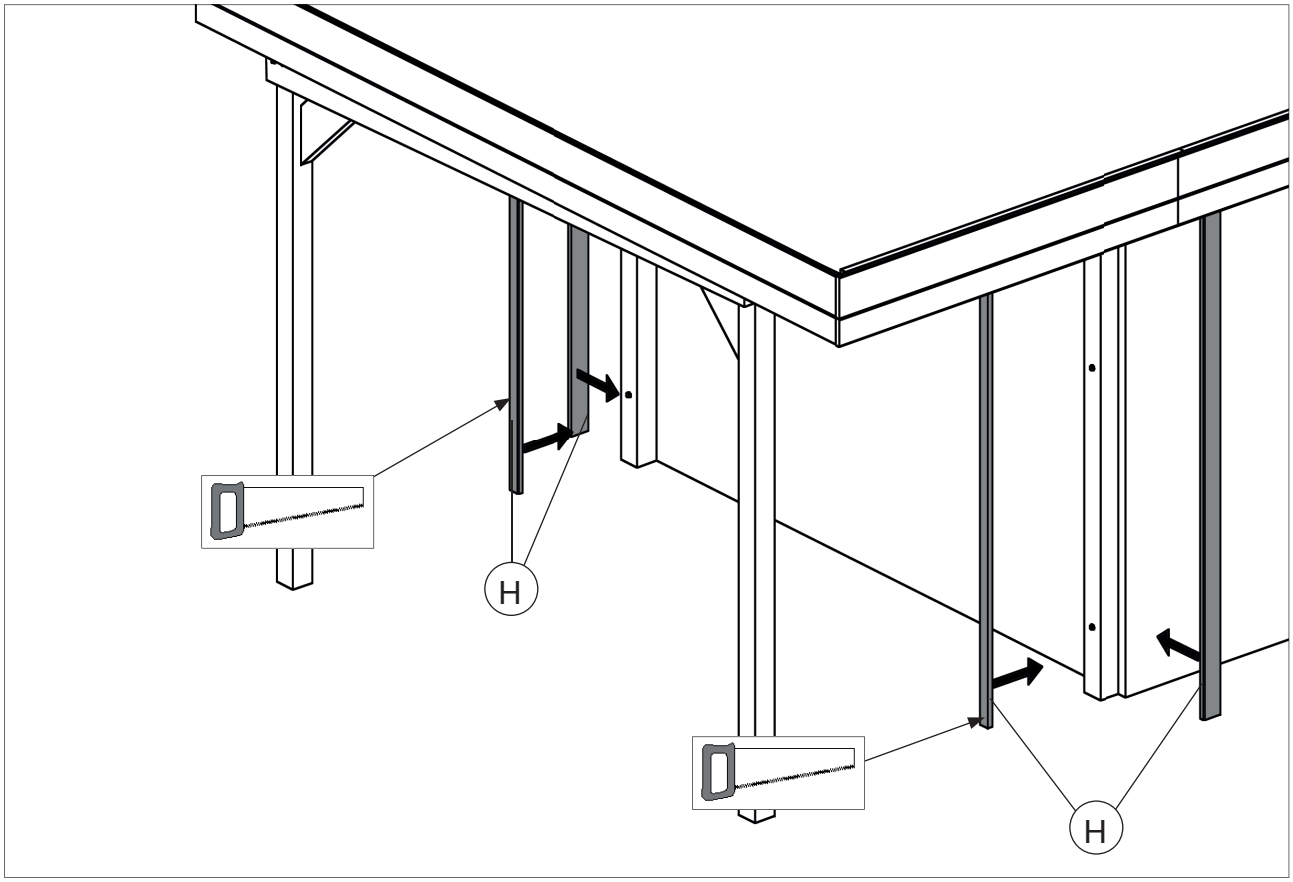

 © Copyright HRB 3662

 © Copyright HRB 3662

www.weka-holzbau.com

WEKA Holzbau GmbH
Johannesstr. 16, 17034 Neubrandenburg
Tel.: +49 (0)395 42908-0
Fax: +49 (0)395 42908-83
Mail: info@weka-holzbau.com
Web: www.weka-holzbau.com

MA Art.-Nr.: 800.0286.17.63