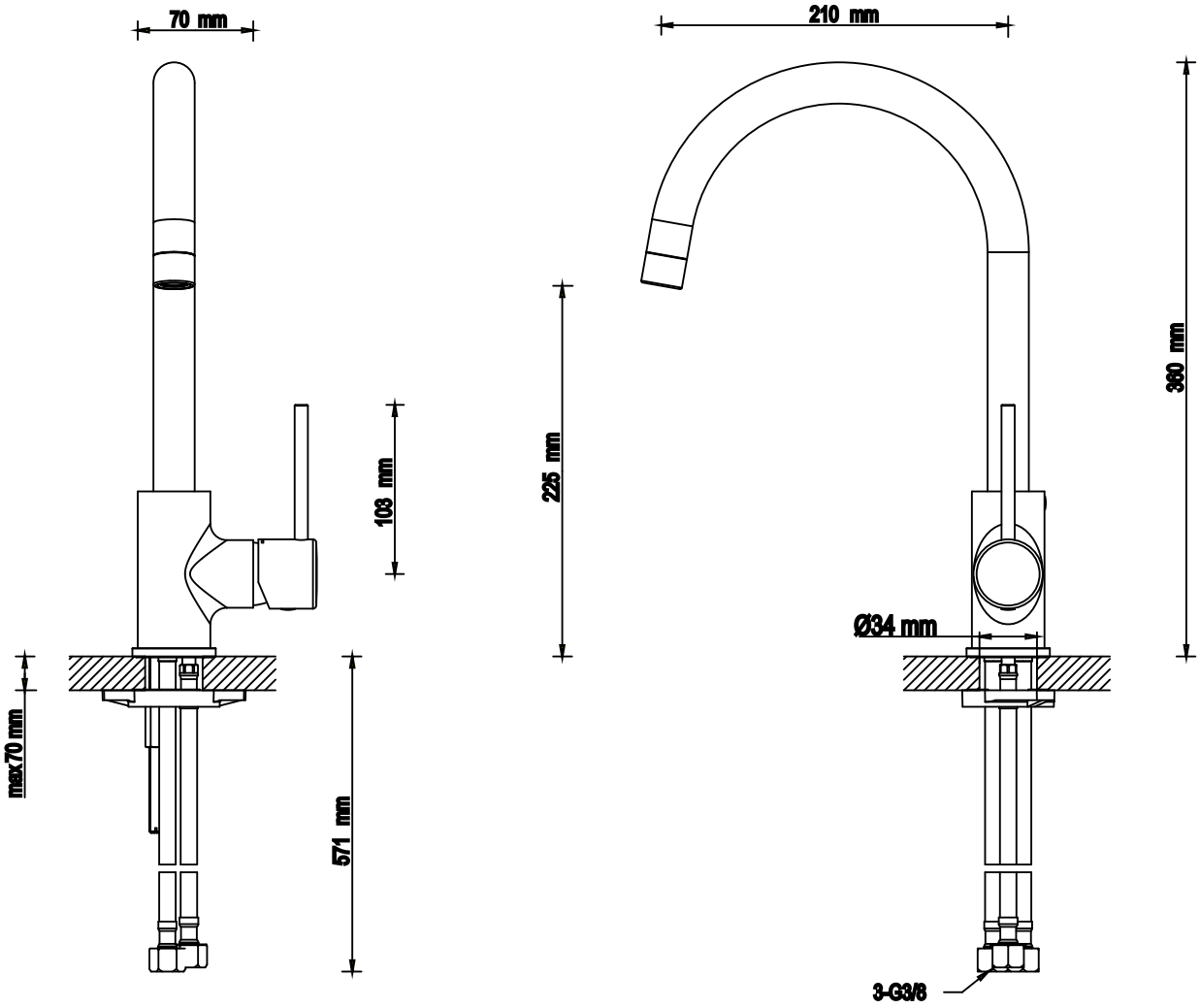
70 mm
210 mm
103 mm
225 mm
380 mm
Ø34 mm
max70 mm
571 mm
3-G3/8